SEE ATTACHED ADDENDUM

WABCO

SERVICE MANUAL 2377

STYLE "H" AND "H-2" D.C. SEARCHLIGHT SIGNAL OPERATING UNIT WITH ALNICO PERMANENT MAGNETS

For Installation and Maintenance see Service Manual 5034

TABLE OF CONTENTS

Section		Page
I	General	3
II	Operating Coil	8
III	Armature Assembly	8
IV	Mounting of Operating Coil	9
V	Armature Bearings	10
VI	Armature Air Gaps	10
VII	Contacts	11
VIII	Permanent Magnets	21
IX	Armature Stops	22
X	Top Case, Lenses and Roundels	22
XI	Wiring	23
XII	Reflector Assembly	26
XIII	Contact Adjustment	26
XIV	Permanent Magnet Assembly	27
XV	Calibration	28
XVI	Inspection Before Sealing	29
XVII	Sealing	30
XVIII	Final Inspection	31
XIX	Adjustment of Lamp Socket	31
XX	Installation of Shipping Screws	31

September, 1974 (Rev. 01/80)
C-73-500-407.4

PRINTED IN U.S.A.

WESTINGHOUSE AIR BRAKE COMPANY
UNION SWITCH & SIGNAL DIVISION
Swissvale Post Office, Pittsburgh, Pa. 15218
An American-Standard Company

WABCO

Style "H-2" Unit
(Plano Convex Lens)

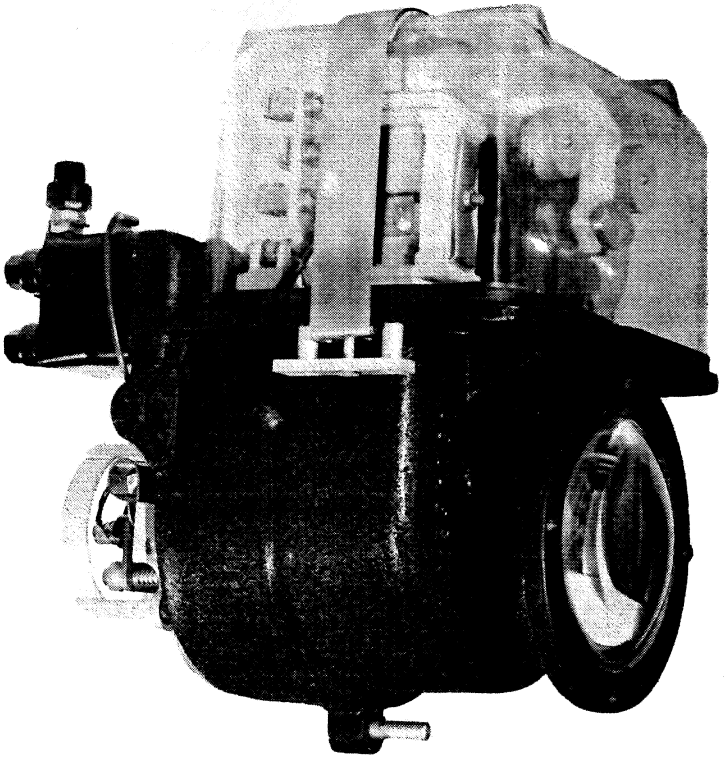

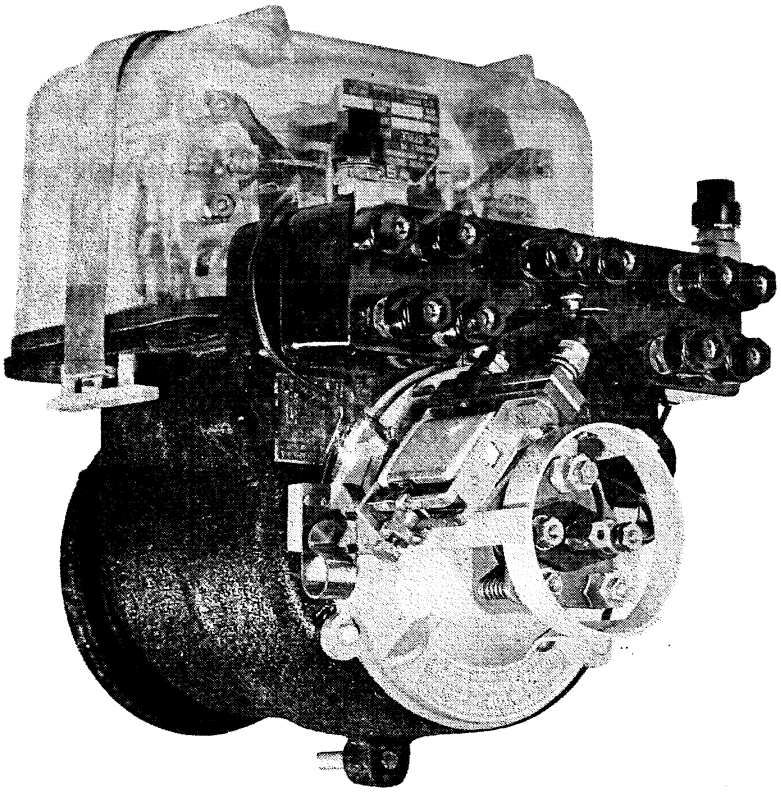

Style "H-2" Unit
(Complete with Plug Coupler)

I. General

The purpose of this specification is to assist shop personnel in the overhaul and repair of "H" and "H-2" operating units that have been removed from service.

NOTE

> It is recommended that the "H" and "H-2" signal mechanisms be inspected at least once every six months where unusual conditions exist, such as operating the mechanism on bridge structures or other high vibration areas. In addition, a complete test of the operating characteristics of all parts should be made at least once every two years.

This specification provides instructions for the repair of all units, whether original or current, together with the necessary information required for the modification of the original units to current production units. Ordinarily it will not be necessary to dismantle a mechanism unless replacement of the operating coil or repairs to a damaged frame structure is required.

On units manufactured prior to 1943, the glass cover was held in place by two screws set through the bottom of the cover. Before removing this type of cover, it was necessary only to break away the wax seals and extract these screws. On units manufactured after 1942, the glass or plastic cover is held in place by means of a supporting strap. Before removing this type of cover from the unit, it is necessary to break the lead seals on each side, slide off the sealing plates, extract the exposed tightening screws and unhook the supporting strap.

Since fixed air-gaps and non-aging iron are used in the magnetic structure, the items most likely to affect the proper working of the operating unit are as follows:

1. Condition of the knife-edge bearings.
2. Presence of foreign particles lodged in the clearance between the armature assembly and stationary parts of the unit.
3. Friction in the pivots.

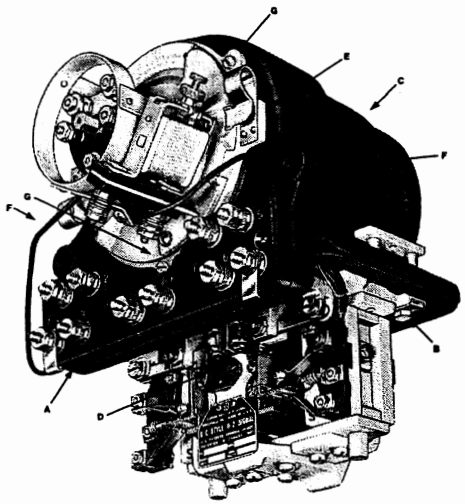

Figure 1. Operating Unit With Permanent Magnet Field

The calibration test will quickly indicate the presence of dirt or friction in any part of the unit. Vertical air gaps between the fixed pole pieces Y and movable pole shoes V, Figures 2 and 3, are nominally set at 0.050 inch (with limits of 0.048" to 0.056") and are located to permit visual inspection or checking with a thickness gage. Clearance around the armature shaft A (Figure 4), where it passes through coil J can be checked by removing the knife-edge bearing from one end of the unit, thereby allowing movement of approximately 3/64 inch from the center position.

If dismantling of any part of the unit is required, first remove permanent magnets O (Figures 2 and 3) from the frame to prevent the attraction of filings or other particles of iron to the magnetic structure. On the earlier type units equipped with eight tungsten permanent magnets, removal of the four magnets on each side is accomplished by first releasing the nut lock W and removing clip X (Figure 2) on spacer block R. (Nut lock W and clip X were not applied to units manufactured prior to 1943). Next release nut lock M, and loosen the clamping nut on the end of screw P which holds the magnets in place. Finally, slide the group of four magnets complete with clips N and bolt P from pole pieces Q by means of the horizontal slot in field spacer R. On later units the four tungsten permanent magnets on each side were replaced by one Alnico magnet O as shown in Figure 3. At the same time, locking nut and nut lock M were replaced by a self-locking stop nut. Also the two horizontal magnet clips N were replaced by a single vertical clip N. When permanent magnets are removed from the unit, they should be placed together in pairs with unlike poles together and stored in a clean covered box or carton to keep clear of filings or iron particles. To assist in identifying the poles of the magnets, the end of each tungsten magnet which attracts the North seeking end of a compass has been marked with a letter S, whereas on all Alnico magnets the end which attracts the South seeking end of a compass has been marked with a letter N. The condition of

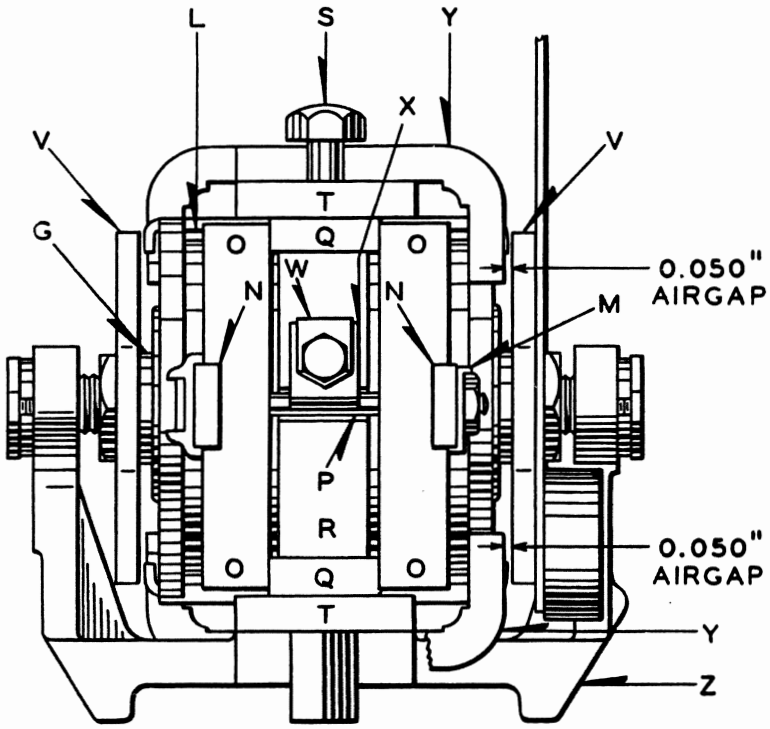

Figure 2. Side View of Operating Mechanism Equipped With Original Style Tungsten Permanent Magnets

the charge on these magnets is an important factor in the proper operation of the unit. (Please refer to Section XIII for instructions to be followed in checking the magnets.)

The next step in dismantling the unit is removal of the top case from the mechanism. First, disconnect the two lamp socket leads F from the terminal board A (Figure 1). Next, remove the reflector assembly complete with its retaining ring E from top case C by taking out three screws G. Break out the wax seals over the fastening screws and remove terminal board A from the top case. Then loosen the binding posts and disconnect all wires from the back of the terminal board. Finally, remove four screws B which allows the top case to be separated from the mechanism. (Two of these screws B are reached from below, while the other two are reached from above through the large opening where the reflector assembly retaining ring E was located.)

The knife edge bearing may be opened for inspection and cleaning by removal of bearing caps D (Figures 1 and 4) which are fastened with two flat head screws B (Figure 4), the heads of which are flush with the surface of the cap. When bearing caps are removed, care must be taken not to lose the steel ball C which is located in the end of shaft A. The steel ball should be handled with tweezers. Knife edge assembly E, bearing cap D, and the steel ball C should be cleaned with benzine and immersed in a covered container of Union Oil UA41220 immediately after removal from the unit. For this purpose use only fresh uncontaminated oil, as the immersed parts can rust if placed in a covered container of contaminated oil. The front and back bearings should be marked and kept in separate containers with their respective spacer shims K placed in order to simplify reassembly in the unit. Inspection should be made of the shaft and knife edge bearings for freedom from dirt or rust, particularly in groove F, the large diameter of shaft insert G, knife edge H of bearing E and the inside surface I of cap D. All of these

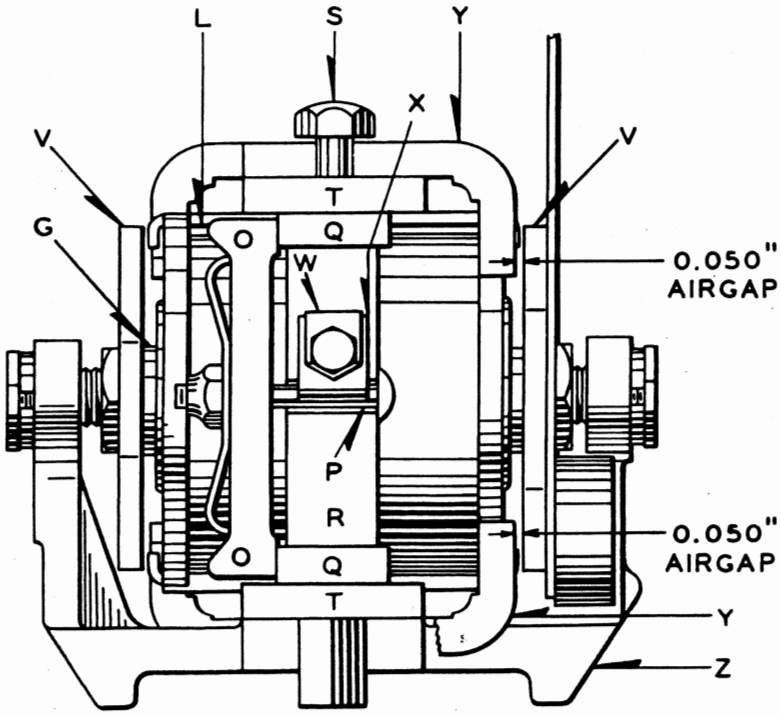

Figure 3. Side View of Operating Mechanism Equipped With Current Alnico Permanent Magnets

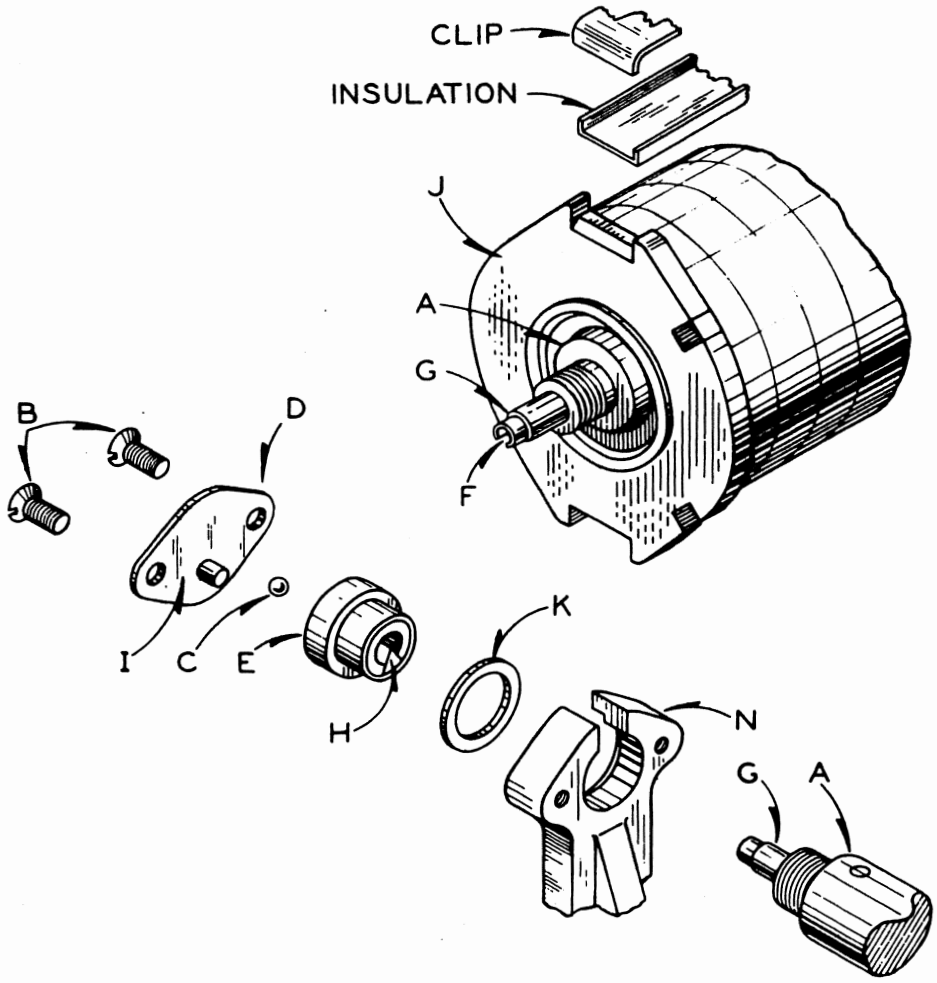

Figure 4. Exploded View of Knife-Edge Bearing Assembly

parts are made of special material, accurately machined and finished and hardened to withstand wear. Surfaces of parts moving adjacent to or in contact with each other require a smooth finish. Any slight roughness found on the knife edge H or in the groove F of the shaft insert may be removed by slight honing of the surface involved. Such treatment should be given before the cleaning and immersion in oil. If the shaft is dirty or rusty, it is necessary to take the frame structure apart to remove the armature for cleaning and polishing. The polished surfaces should then be given a coat of Union Oil UA41220. The excess oil should be wiped from the oiled surfaces with a clean dry lintless cloth.

To separate the armature and operating coil from the frame of the mechanism, remove the two hexagonal head screws S (Figures 2 and 3) which hold backstrap T and field pole pieces Q to spacer R. The contact and counterweight arm supporting brackets U (Figure 7) are doweled to upper backstrap T. The contact assemblies and counterweight arms F (Figure 7) are fastened to these brackets. Thus, the upper portion of the mechanism consisting of back strap, contacts, counterweight arms and their supporting brackets may be separated from the top of the mechanism as a unit, simply by removing screws S. With the bearings and caps already removed, the armature assembly consisting of armature G, pole shoes V and coil L (Figure 5) may be lifted out of the mechanism. When removing the coil from its clip mountings, the channels of insulation

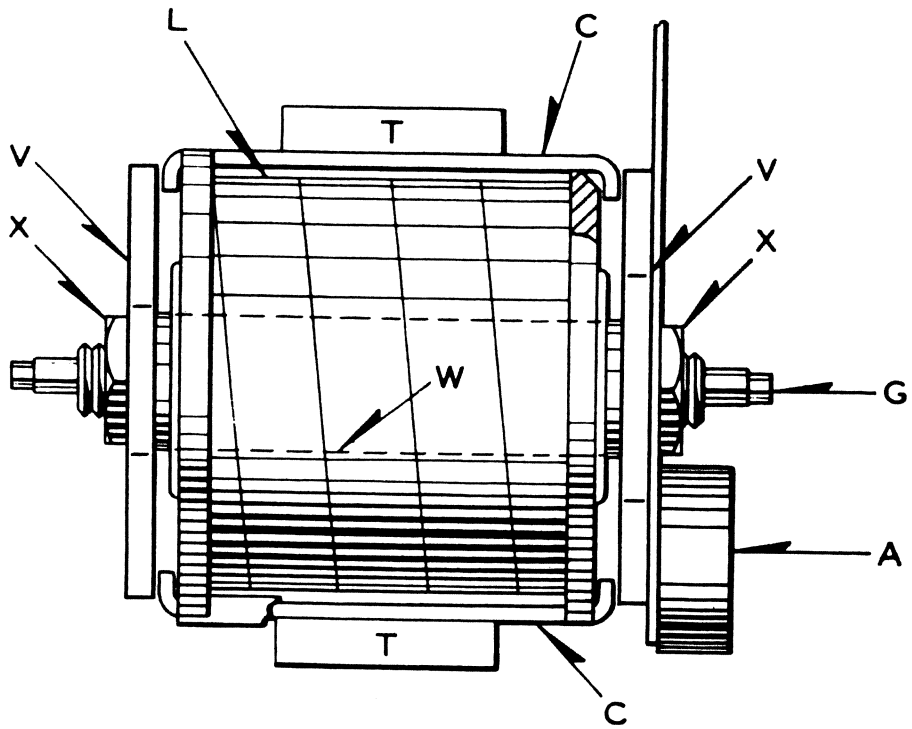

Figure 5. View Showing Armature Assembly and Method of Supporting the Operating Coil

on the clips should be examined for lightning damage. The insulations may be reused when the mechanism is reassembled, if found in satisfactory condition.

To remove the coil from the armature assembly (Figure 5), detach one of the pole shoes V which is held in place against iron core W of shaft G by means of nut X and kept in accurate relationship to the shaft by two dowel pins. Nut X is also prick punched into the threads of shaft G to make it non-turning. Remove nut X and exert outward pressure on pole shoe V, taking care that the two dowel pins are not bent or lost. Coil L may now be slipped off shaft G.

Dowel pins are also used to maintain the accuracy of the location of fixed pole pieces Y and backstraps T (Figures 2 and 3) and between armature bearing bracket Z and lower backstrap T. Unless it is necessary to replace the armature shaft, there should be no occasion to take these joints apart. If the armature shaft is replaced, in order to properly realign and adjust the air gaps, it will be necessary to remove the dowels from the joints between all fixed pole pieces Y and backstraps T. After such readjustments these joints must be redoweled as described in Section VI. In assembly of the mechanism great care has been exercised in the accurate location and holding together of the parts which are involved in maintaining a fixed parallel armature air gap.

II. OPERATING COIL

When replacing the operating coil, the coil, head, copper tube, and leads should be carefully checked for cleanliness and that all excess impregnating compound has been removed. This check is very important and is to insure against foreign particles getting into the working mechanism.

New coils furnished from the factory since 1941 have been wound on copper sleeves with heads spun on. Prior to this, operating units were furnished with coils wound on moulded spools. The procedure for assembly to the mechanism differs for the two types of coils and is discussed in Section IV.

III. ARMATURE ASSEMBLY

When the armature of the original manufactured units is completely assembled with spectacle and roundels in place and doweled, it is balanced by filing away a portion of the lead counterweight A (Figure 5) if necessary. While balancing the armature, the grooves in the armature shaft should rest either on horizontal knife-edge bearings or cone points. Two conical points of small angle, as illustrated in Figure 6, may be used for this purpose. The use of conical points will eliminate the necessity of careful alignment and requires only that both points be kept sharp and in the same horizontal plane. Later design assemblies had plated brass fixed counterweights which did not require balancing as did the earlier assemblies.

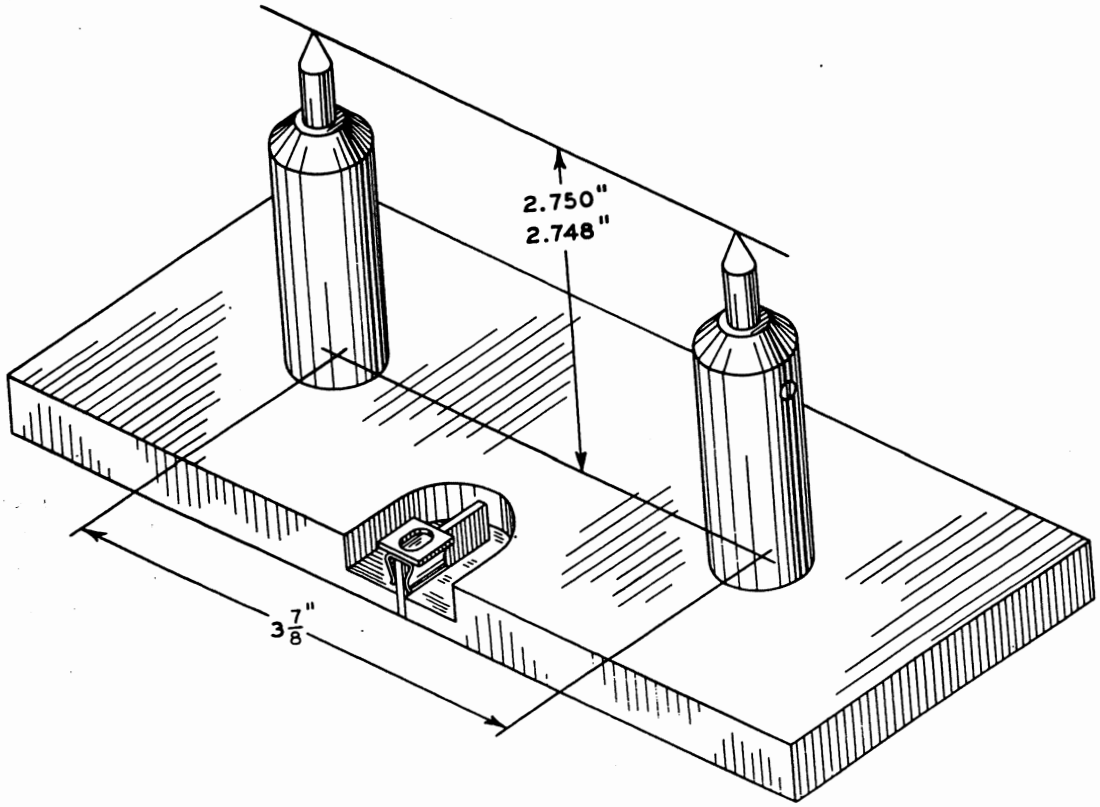

Figure 6. Fixture for Use in Balancing Armature

With the armature resting on the two cone points, the lead counterweight may be filed to give the proper balance. When correctly balanced, the lead weights will slightly over-balance the spectacle and cause the armature to come to rest with the center roundel in a vertical position. This slight over-balance should be of such magnitude that a 14.5 grain weight, when clamped above the center roundel, will result in a balanced condition where the spectacle will remain in any angular position that it may be placed.

IV. MOUNTING OF OPERATING COIL

The operating coil should be mounted and adjusted to its mounting supports with the channel insulation in place on the clip before the coil is assembled on the armature core. Replace any defective insulations which were removed when the unit was dismantled. If the unit was of early manufacture and not equipped with insulations, the insulating channels should be applied to the clip mountings for improved lightning protection of the operating coil. To adapt the insulation to earlier units simply enlarge the notches in the coil head to allow the insulations to be applied over the clips in the notches of the coil head. It should rest in its lower support in such a position that the armature core is exactly centered with the hole in the spool and equal clearance all around the core. The top coil support C (Figure 5), should clamp coil L in this position when top backstrap T is fastened in place.

The correct location of the coil with respect to the armature core can best be obtained by placing inside the coil a 2-3/4 inch long sleeve with an outside diameter of 0.788 inch and an inside diameter which will just slide over a 9/16 inch diameter round rod. This rod must be long enough to extend through bearing holes in both ends of bracket N (Figure 4). With the parts thus assembled, the rod should turn without binding. The height of the coil may be adjusted by bending the supporting clips C or by slightly filing the notches in the end of the spool J (Figure 4) in which the clips engage.

The coil aligning sleeve mentioned above is for the coils wound on copper sleeves with heads spun on and furnished on units since 1941. For the coils wound on moulded spools and furnished prior to 1942 a sleeve with a smaller outside diameter will be required. The outside diameter of this sleeve must be 0.750 inch. The alignment of the coil is performed exactly the same for both types of coils and is as described above.

When the operating coil has been properly located, the coil should be assembled on the armature core and the armature pole piece fastened in place. The armature, operating coil and knife edge bearings are then assembled in position. When fastening the top back strap and field pole piece to the field spacer, care should be taken to keep the faces of the pole pieces attached to the top and bottom back strap in the same plane on each side in order to secure parallel air gaps.

V. ARMATURE BEARINGS

When the mechanism is ready to have the bearings reassembled, remove the bearing parts from the oil by use of tweezers and together with the shaft inserts G (Figure 4), thoroughly wipe away the excess of oil with a chamois or other suitable material which will not deposit particles on the surface. Just before placing them in the unit, wash the steel balls C in benzine and then dry between clean cloths. After drying, the steel balls should not be touched as moisture from the hands may cause them to rust. It is best to use small tweezers at all times for handling the steel balls.

In assembling the bearing, little difficulty will be encountered in restoring them to their original position if the individual bearings had been marked when they were removed and the parts stored together with the spacer shims. With the bearing in place and the grooves in the shaft resting on the knife edges, the clearance between the large diameter of the shaft insert G and the inside surface of the bearing E should not exceed 0.012 inch nor be less than 0.003 inch.

After both bearings have been installed, the scribed line on the bottom of each bearing must be carefully lined up with a similar scribed line on the bearing bracket. This is to assure the proper positioning of the knife edges H. The steel balls C are then inserted in the ends of the shaft and the caps D attached. There is a small pin attached to the inner surface of cap D which fits into a slot on the inner surface of bearing E and maintains it in its proper position. The end play of the armature should be tried only when screws B are carefully tightened. This end play may be adjusted by adding or removing shims K between the shoulder of bearing E and the bracket N and should be 0.005 inch.

VI. ARMATURE AIR GAPS

The air gaps, shown in Figures 2 and 3, are nominally 0.050 inch, approximately parallel, and are measured with the armature shaft resting on both bearings. Separate checks shall be made for both full stroke positions of the armature as follows:

A. With the end play taken up in one direction by holding the movable pole shoe as close to the fixed pole piece as the end play permits, the air gap shall not be less than 0.048 inch at any point.

B. With the end play taken up in the opposite direction, the air gap shall not be greater than 0.056 inch at its closest point.

These checks should be made on both ends of the armature.

Should repairs to the armature assembly (Figure 5), have disturbed these air gaps, they may be readjusted by removing the dowel pins from the pole pieces Y (Figures 2 and 3), and loosening the two fillister head screws which fasten each pole piece to backstraps T. After the air gaps have been re-adjusted and the screws tightened, the joint must be redoweled. This is done by drilling two new (0.098 inch) No. 40 drill size holes through each pole piece 1/8 inch into backstrap T, and inserting the dowel pins which were removed previously.

VII. CONTACTS

Original units were equipped with the obsolete link and hinge type contact arrangement shown in Figure 7.

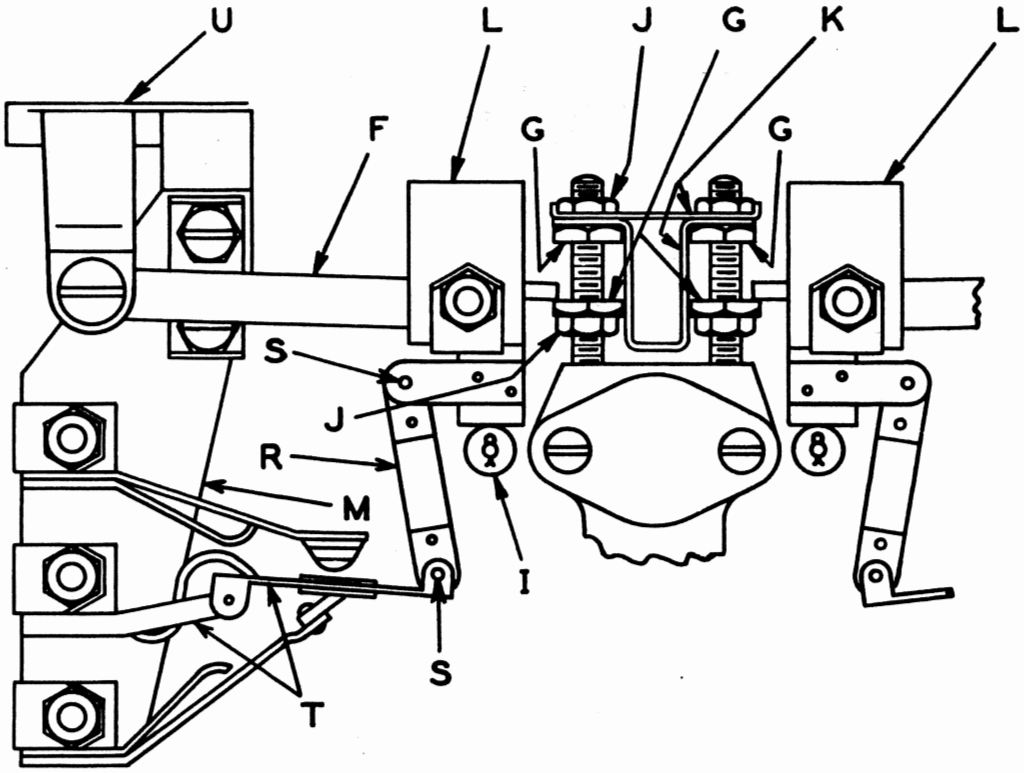

Figure 7. View Showing the Operating Studs, Counterweights, Stops and Obsolete Link and Hinge Type Contacts

Since 1950 the operating units have been equipped with the current pivotless type of contacts as illustrated in Figures 8 and 9. The installation of the pivotless contacts on the original units must be done in a relay repair shop and can be handled best while the units are undergoing general overhaul.

To obtain the older arrangement (as shown in Figure 8), counterweight arm F, link R with two hinge pins S and center contact T, Figure 7, are removed and replaced by counterweight arm and contact anvil complete Pc. No. UN290098 and terminal connection X. See paragraphs B through F for conversion details.

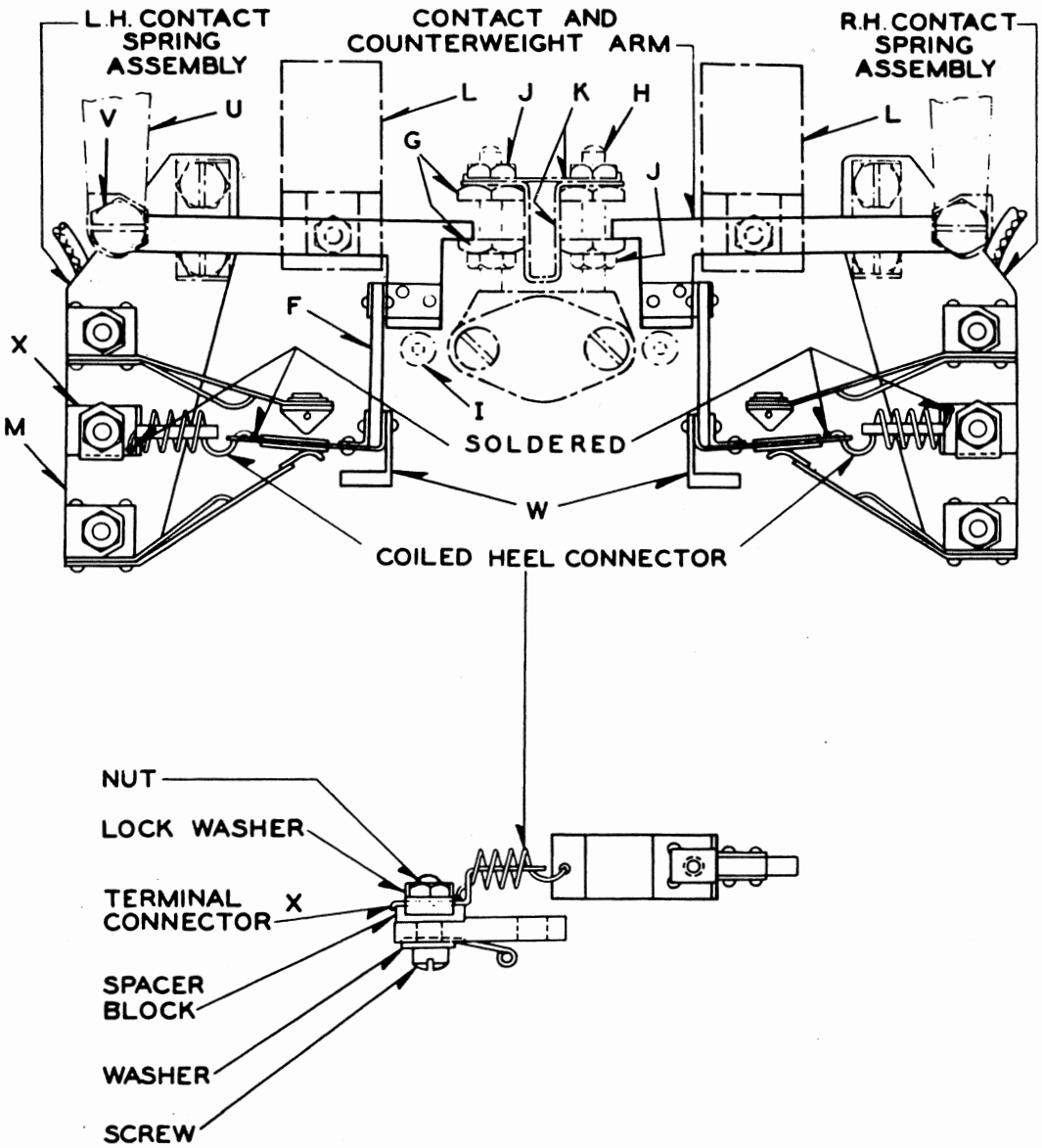

Figure 8. View Showing Operating Studs, Counterweights, Stops and New Pivotless Type Contacts

NOTE:

To obtain the most recent arrangement (as shown in Figure 9), follow the instructions of paragraph A.

A. Improved Type Contacts

In 1963, an improved type contact arrangement was adopted to simplify the heel connection by eliminating the coiling of the flexible connection and to reduce the required number of different parts. In this redesign both front and back contacts are reversible for use on both the right or left side of the mechanism. As in previous designs the front contact is applied to the top terminal on the contact board, the new back contact has been moved to the center terminal and the simplified heel connector has been applied to the bottom of the terminal board. This improved design has a new counterweight arm with a revised anvil contact. The flexible heel connector is a simple length of flexible connector draped between the soldering lug on the bottom of the anvil and the heel connector block on the contact terminal board.

The advantages resulting from this improved design are three fold, namely (1) interchangeability of R. H. and L. H. contacts so that only one front and one back contact need be stocked, (2) a simplified flexible heel connector lead in place of the special coiled type and (3) a safer contact since overheating or lightning damage to the flexible heel connector cannot result in bridging to other contact members.

This improved design requires only a slight change in wiring. The center and bottom leads for the heel and back contact attached to the back of each contact terminal board must be interchanged. No change is required to wiring on the main (external) terminal board.

For instructions on dismantling and assembling see earlier sections of this specification.

Installation of the new improved type contact as shown in Figure 9 shall be as follows:

1. Replace the present front contact member on the top terminal with the new improved front contact.

2. Replace the present heel contact on the center terminal location with the new improved back contact.

3. Replace the present back contact on the bottom terminal with the new improved heel block.

4. Assemble and fit new counterweight arm and contact anvil assemblies to both sides of the mechanism, installing new larger stop nuts and the new nut locks (described earlier in this specification). New counterweight arms and contact anvil kits should be selected according to the type of counterweight arm brackets now on the mechanism, namely, with the wide (present standard) or narrow (obsolete design) slots. For assemblies presently using the narrow slot or older link arrangements order kit X395595-001 for the H mechanics or kit X395595-002 for the H2 mechanics. Note also that a special pivot screw is required for short bushing arms.

5. When installing the flexible heel connection for this improved design of contacts make certain that each end of this flexible connection is properly and fully dressed into the position shown in Figure 9 for best results.

6. Interchange wires to center and bottom terminal block on each terminal block on each terminal board as described above.

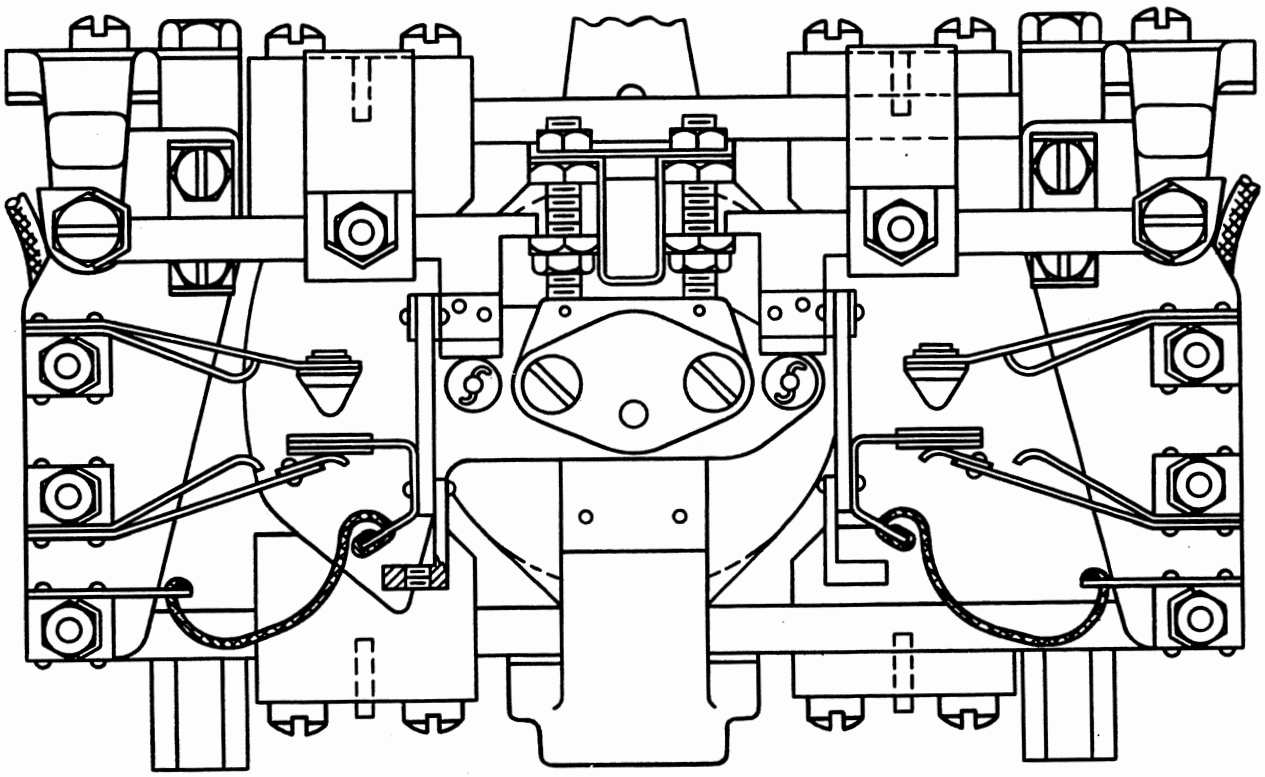

Figure 9. Improved Pivotless Type Contact Assembly

B. Before assembling center contacts and counterweight arms, replace any damaged front or back contacts, also perform any necessary cleaning, repairs or adjustments of the magnetic structure, armature, spectacle, knife edge bearings and contact brackets.

C. When making the conversion from the old link and hinge type of contact assembly to the earlier pivotless contacts, it is necessary to modify the mechanism to install the contact and counterweight arms equipped with long molded-in delrin bushings.

The necessary material for making this modification including all parts necessary for the contact conversion is contained in Kit UO374034, or X436937 (which contains complete contact spring assemblies).

1. Discard the two original contact brackets 1 and 2 and the old dowel pins 3 (Figure 10), along with the other items to be replaced in the changeover to the pivotless contacts.

   Assemble the new contact brackets 1 and 2 (Figure 10) to the assembly using the screws from the old brackets. Temporarily install the new contact and counterweight arms F (Figure 9), using the new pivot screws from the kit. Adjust these brackets 1 and 2 by tapping lightly at X and Y with a brass or plastic hammer until:

   a. The counterweight arms are parallel to the front pole shoe.

   b. The ends of the arms F are centered on the lower stop nuts G (Figure 8) and must have 1/32 inch end clearance from the studs H.

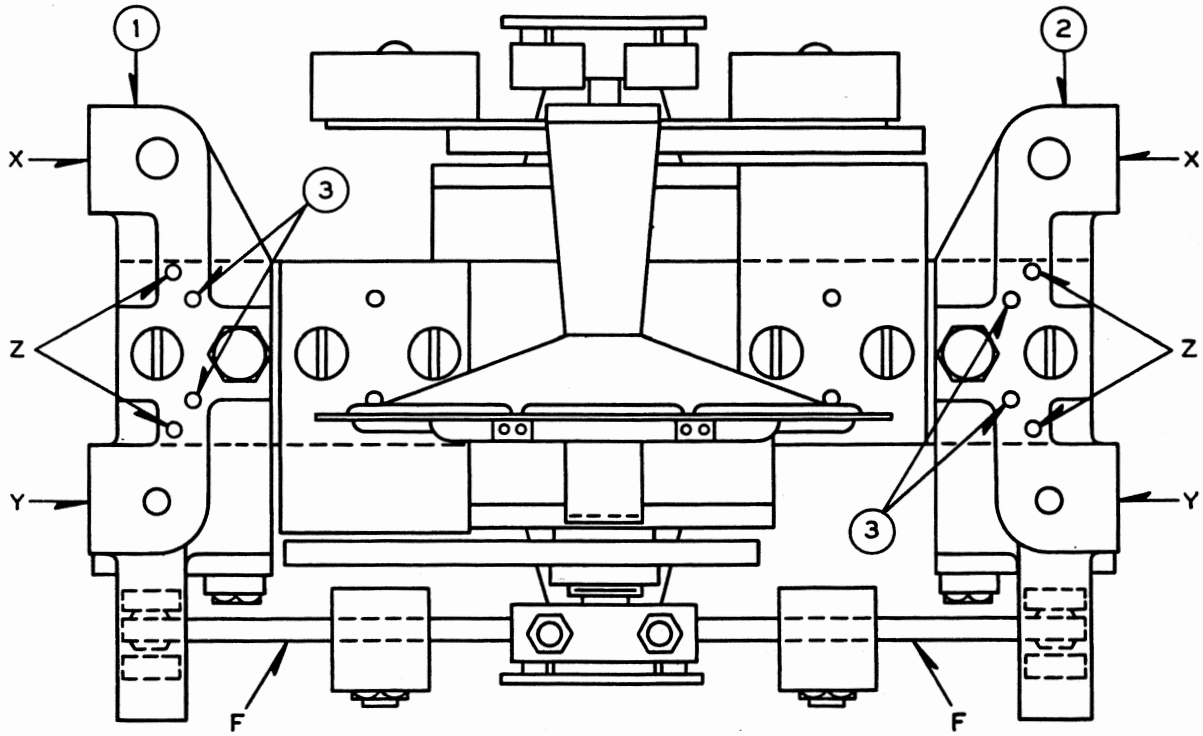

Figure 10. Top View of Mechanism Showing Doweling of Pole Pieces and Counterweight Arm Brackets

3. Securely tighten the two screws holding each bracket to the frame, maintaining the adjustments above.

4. Dowel brackets 1 and 2 to the frame with the four new dowel pins UM176319 from the kit. When drilling operations are being performed, the permanent magnets must be removed from the mechanism to keep steel cuttings from adhering to the magnetic circuit. Since the old brackets were originally doweled, the dowel pin holes in the new brackets at points 3 (Figure 10) will probably not line up with the old holes in the upper backstrap. It will therefore be necessary to drill new ones. These should be .098 inch in diameter (#40 drill size) and should be drilled through the bracket and 3/16 inch deep into the backstrap. Points Z are suggested new locations for the holes.

5. After the brackets have been doweled, remove the counterweight arms and assemble the contact terminal boards M (Figure 8) to the new brackets making sure that the outside edges are square with the backstrap and that the nut locks are in place. If the wedge type back contact tips (Figure 7) are to be replaced with the rounded tip back contacts (Figure 8) the change should be made before the boards are attached to the brackets.

6. Permanently assemble counterweight arms F (Figure 8) using the new stainless steel pivot screws V from the kit and assemble new large upper stop nuts G to studs H.

7. If the existing magnets on the unit are to be re-used, reassemble the old counterweights L to the new arms. If the magnets are being changed from tungsten to Alnico, handle them and the counterweights according to the instructions in Section VIII entitled "Permanent Magnets". CAUTION: The magnetic structure should be thoroughly cleaned before the magnets are re-attached.

8. Adjust the armature stop nuts in accordance with instructions in Section IX, locking the adjustment securely with jam nuts J using new nut locks K.

9. The new contact and counterweight arms are equipped with brackets W (Figure 8), for shipping screws. To assure adequate clearance between these brackets and the name plate, two washers UM49593, have been furnished in the kit. These are to be assembled on the name plate screws between the plate and the armature bracket.

D. Contact Anvil and Counterweight Arm (Pc. UN290098)

Counterweight arm must be as nearly parallel to the pole shoes as possible and be free from burrs and rough edges where contact is made with the roller and with the back stop. The pivot bushing must be securely held in place with the ends free from burrs. The pivot bushing extends out on each side of the arm approximately 0.010 inch for counterweight arms on the original narrow slot brackets and approximately 0.073 inch for the present wide slot brackets. The hole in the pivot bushing is a reamed fit for the pivot. The arm must turn freely on the pivot. The reaming operation is performed at the factory, but if necessary can be re-reamed with a 0.100 inch diameter straight pin reamer. Arms with molded Nylon or Delrin bushings are molded to size and need only to be cleaned out.

The stop extension on the arm must be centered on the back stop nut and rest squarely on it. If necessary this can be obtained by slight bending of the arm in or out with respect to its length. Under no circumstances is the arm to be twisted.

The contact anvil and its insulating support must be approximately square, with the arm in both planes; and the silver contact surface must be flat and level front to back. Adjustments of the contact anvil may be made by slightly bending the brackets where the support insulation is attached to the arm.

E. Armature Stops

The armature stroke together with the travel of the contact anvil and counterweight arms shall be adjusted by means of the armature stops in accordance with the following paragraphs.

F. Contacts

1. The counterweight arm and contact anvil complete assemblies Pc. UN290098, shall be assembled to the operating unit before the coiled heel connector ribbons are attached.

   a. Where the front carbon and back silver contact members are damaged, the entire contact spring board should be removed and replaced with a new one, which has a terminal connector Pc. UM290049 attached. This also should be done before the coiled heel connector ribbons are attached.

   b. When the front carbon and back silver contact members are still in good condition the contact board and these parts can be reused. Remove the center contact anvil from the old board and replace it with terminal connector, spacer block, etc., as illustrated in Figure 8.

2. In the de-energized position the contact anvil should have a slope of between five and five and one-half degrees above horizontal.

3. The carbon tips on the front contacts, and the silver tips on the back contacts, must be centered crosswise on the silver anvils and squarely "make".

4. With the anvil at mid stroke the carbon and silver tips on the front and back contacts should be approximately centered lengthwise on the silver.

5. The coiled heel connectors have been wound at the factory and shipped with one left hand and one right hand connector fastened to a wood dowel with tape to insure protection of the coils. To prevent damage and distortion to the coils of the connectors they should be kept on the dowel until just before assembly to the operating unit. The coiled connector should be slipped over the narrow protruding end of the terminal connector and soldered to the terminal connector and to the terminal, as illustrated in Figure 8, before attachment to the anvil. The first turn of the coiled connector shall start right at the bend in the terminal with the turns clockwise for left hand contact and counterclockwise for right hand contact, facing away from the anvil, and the fourth turn shall end behind the terminal projection. The anvil end of the ribbon shall pass through the hole in the anvil support and be soldered on top, near the front edge, with a minimum loop.

6. With the contact anvil in full picked up position, the protruding end of the terminal should extend approximately 1/16 inch beyond the last turn of the coiled connector.

7. The coiled connector should be adjusted so with the anvil at mid stroke the coil should have zero tension, at full picked up position it should have minimum tension, and at full drop-away position it should have minimum compression, with adjacent turns not touching.

Electrical connection is thus completed to terminal board leads through a coiled flexible heel connector soldered to both the contact anvil and the terminal connector and kept in place by an extension on the terminal connector.

TABLE I

Repair Kits for Application of Pivotless Contacts and Wide Slot Brackets to Styles "H" & "H-2" Searchlight Units

Type of Pivotless Contacts After Conversion	Searchlight Unit **		
	Standard with Wide Slot Brackets		Early with Narrow Slot Brackets
	Complete Kit *	Cwt. Arm Only	Complete Kit
Early	X436937(for H) U037034(for H2)	N290098	
Improved	X395595-001 (for H) X395595-002 (for H2)	N391665	X395595-001 (for H) X395595-002 (for H2)

For material required for replacing center contacts connection only for early design units, order piece number 0298884.

* With std. Pivot Screw Pc. M332443

** When ordering any of the above repair kits, order the kit having the type of name plate required.

Note:

Since late 1963, back contact springs have been equipped with bifurcated tips. As of February 1972, repair parts for narrow slot mechanics have not been supplied (see above Table I for repair parts kits to convert to wide slot).

WABCO

TABLE II. STANDARDIZED REFERENCES FOR STYLE "H" AND "H-2" SEARCHLIGHT SIGNAL UNITS

Style	Piece Number	Ohms	Roundels			Plug Coupler		Wiring Dwg. 12626	Special
			RH	M	LH	With	Without	Sh.	
H	UN294305	250	G	R	Y		X	5	
	UN294329	250	G	R	Y	X		5	
H-2	*UN290148	250	G	R	Y	X		5	
	*UN290150	250	G	R	Y		X	5	
	*UN294139	500	G	R	Y		X	5	
	UN294165	250	Y	R	G	X		6	International Nickle Canadian Pacific
	*UN294167	500	G	R	Y	X		5	
	UN294184	250	LWh	R	Y	X		5	
	UN294186	250	G	R	Y	X		10	St. Louis & San Francisco
	UN294187	250	G	Bl	Y	X		5	Atchison, Topeka & Santa Fe
	UN298113	500	LWh	R	Y	X		5	
	UN304512	250	LWh	R	Y		X	5	
	UN304743	250	R	R	LWh		X	5	
	UN311459	250	R	R	LWh	X		5	
	UN334830	500	LWh	R	Y		X	5	
	UN393461	250	G	R	Blank		X	5	

* Stock Items

VIII. PERMANENT MAGNETS

When the original style units are to be brought up-to-date by replacing the old tungsten magnets with the new Alnico magnets, proceed with the replacement in the following manner:

Replacement Kit, Pc. UO320078 Dwg. C9157-Sh. 14, includes all parts necessary for replacing the tungsten steel magnets with Alnico magnets. The mounting parts have been reduced to a single clip, a non-turning screw and a self-locking nut. Only one Alnico magnet is used on each side of the operating unit. It is necessary to use heavier counterweights in order to properly calibrate the unit. Figure 11 illustrates the assembly of parts in this kit.

A. Make up the new counterweight assemblies consisting of counterweight A, nut lock B, nut C, and screw D. CAUTION: Assemble the nut lock so its upper edge is against the offset in the counterweight making it non-turning. Do not turn up the lower end of the nut lock until after the operating unit has been calibrated.

B. Assembly of the magnets to the unit will be described in Section XIV.

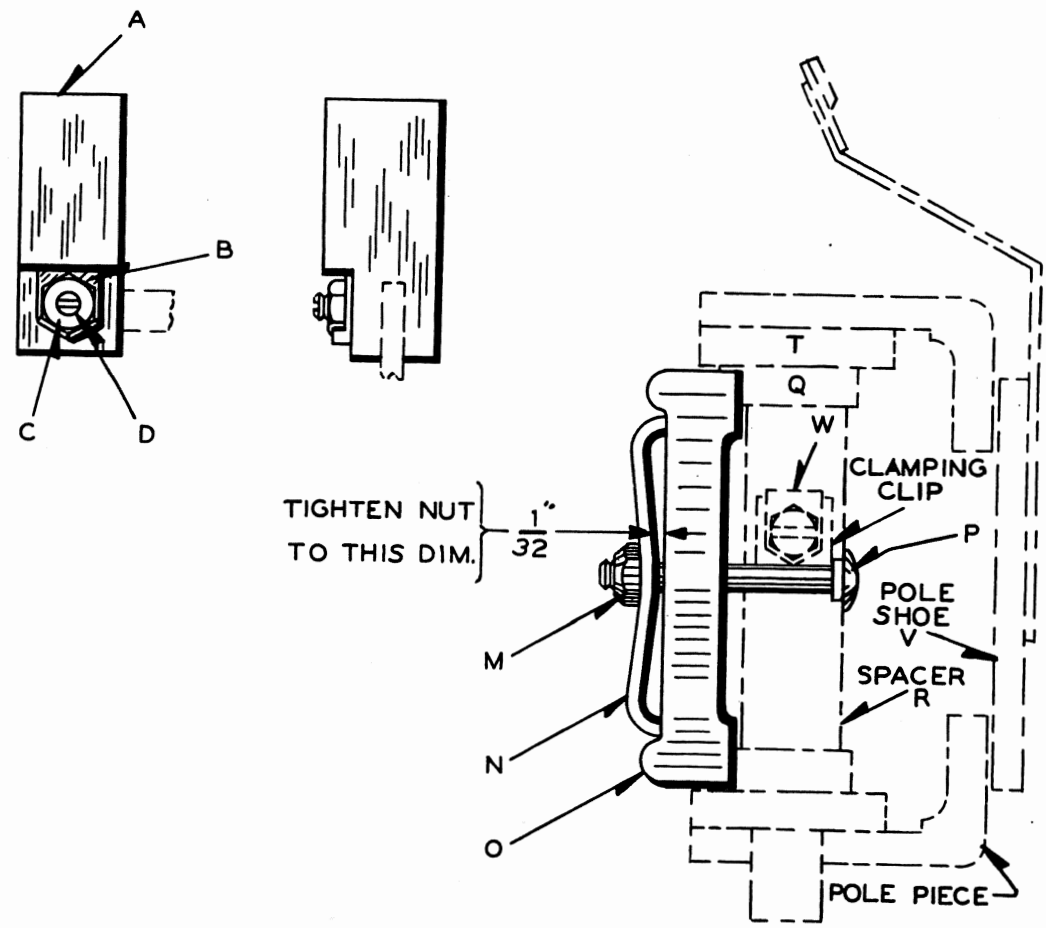

Figure 11. Assembly of Alnico Magnet

IX. ARMATURE STOPS

Before assembling the top case to the mechanism, the setting of the armature stops should be checked and necessary readjustments made. Counterweight arms F (Figure 8) limit the movement of the armature by means of adjustable stops G. Replace the old small stop nuts G, and nut lock H (Figure 7) with the new larger stop nut G and narrower nut lock H (Figure 8). When adjusting the stops G, the nut lock H must be removed. With the center of the middle roundel in line with the centerline of the mechanism, counterweight arms F should just touch both their respective back stops H and roller on the operating studs I, which are mounted on the armature pole shoe. The top stops G should be set to limit the rotation of the armature so that the centers of the outer roundels will be in line with the centerline of the mechanism at the end of their respective strokes. The setting and checking of these stops can be facilitated by use of a simple gage which when clamped to the top of the mechanism will locate, at the height of the roundels, a pointer which is in line with the center-line of the mechanism.

After stops have been set mechanically they should be checked electrically to assure the vane will assume its correct position under operating conditions. This check is made by temporarily attaching a set of permanent magnets to the mechanism and applying energy of each polarity to the coil. After this check remove the magnets, apply nut locks K and tighten lock nuts J.

X. TOP CASE, LENSES, AND ROUNDELS

Before installing the top case, inspect the colored glass roundels in the spectacle to see that they are not broken and are free from scratches or other defects which may interfere with the passage of the light beam through them. In general, small scratches are not objectionable except in the center of the roundel where the light beam is concentrated. Although the flat colored roundels are made of a special heat resisting glass, occasionally one will crack from the intense heat of the concentrated light beam. A simple crack through the glass is not considered objectionable as the retaining rim will hold the parts in place. In fact, the green and purple flat roundels are pre-cracked to help relieve the heat strains. However, if a double crack should occur or a small piece break out and allow white light to pass, the roundel should be replaced. Check to see that the respective colored roundels are in their proper location and that the spectacle and its supporting arm have not been bent or distorted during the repair of the mechanism.

In April 1945, the conical red roundel was adopted as standard on all operating units. Since that time, usage and extensive testing has demonstrated that the green conical roundel is more resistant to heat breakage than the flat roundel, even after the latter had been pre-cracked. Beginning March 1, 1956 the conical green and yellow roundels were standardized. In order to balance the appearance of the various color aspects, it has long been the practice to "de-polish" one side of the yellow roundel.

This practice, while more difficult to control with conical roundels, has resulted in two methods of reduction in brightness, namely, with the outer surface sand-blasted or covered with annular rings. Occasionally, the application of conical roundels to the original units, results in slightly lower release values and requires a heavier counterweight such as furnished in the kits for converting to Alnico permanent magnets. References for the conical roundels are:

Conical Red Roundel	-N413946
Conical Green Roundel	-N413965
Conical Yellow Roundel	-N413966
Conical Lunar White Roundel	-N413967

See Service Manual 5461 for instructions for applying conical roundels.

The mechanism is now ready to have the top case attached. The case should be inspected to see that the lens or front cover glass is clean and undamaged, and that the inside of the case is clear of dirt and other foreign particles. At this time, the lacing on the wire leads should be checked and replaced if necessary. The two coil leads should be laced in with the contact leads on the right hand side.

Attach the top case by installing the four screws B (Figure 1), training the leads up and through the terminal board opening. Screws B must be tight. The two screws which are inserted from the bottom are secured with lock washers. The two screws which are inserted from the top may be secured by prick punching the threads when they come through the bracket on the bottom side. If the threads do not extend a sufficient distance for prick punching they should be replaced with two 1/4 inch - 20 x 3/4 inch hex head steel cap screws. After the top case has been attached, check the clearance between the spectacle and back surface of the conical section which extends into the inside of top case from the front. This clearance should be 1/4 inch when each roundel is in the center. Also check to see that the roundels are concentric with the 11/16 inch hole in the conical section through which the light beam passes. This check should be made for the middle and both energized positions. Slight readjustment of the armature stops may be made if found necessary. Variations in the vertical position of the roundels and in the 1/4 inch clearance may be corrected by bending the spectacle supporting vane.

XI. WIRING

The internal wires should be attached to the binding posts on the back of terminal board in accordance with the wiring diagram shown in Figure 12 or 13, whichever applies to the particular unit. These two diagrams are similar except for terminal designation and the manner in which coil leads are connected. Check to see that the small carborundum block is in position between the coil terminals on the back of the board.

This block acts as a shunt lightning arrester for the coil and is secured by two clips under the coil lead eyelets. With the permanent magnet field temporarily attached to the mechanism, apply voltage of polarity shown in the corresponding diagram, to the coil binding posts. The armature should rotate in the direction to position the proper roundel in the center. This should be the left hand roundel for signals per Figure 12, and the right hand roundel for signals per Figure 13. If the direction of rotation is incorrect, reverse the coil leads on the terminal board. Finally, attach the terminal board to the top case applying between them a thin film of black insulating varnish which has been allowed to thicken.

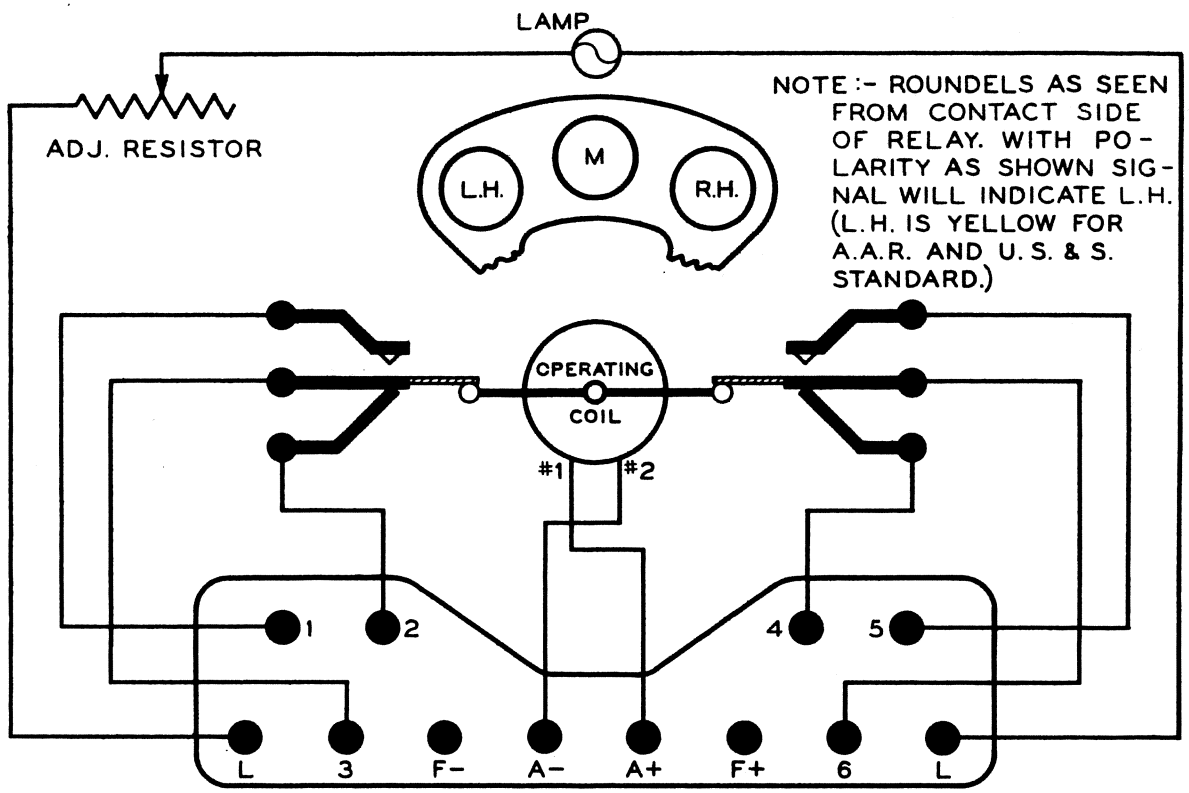

Figure 12. Diagram of Internal Wiring of Signal with Permanent Magnets.

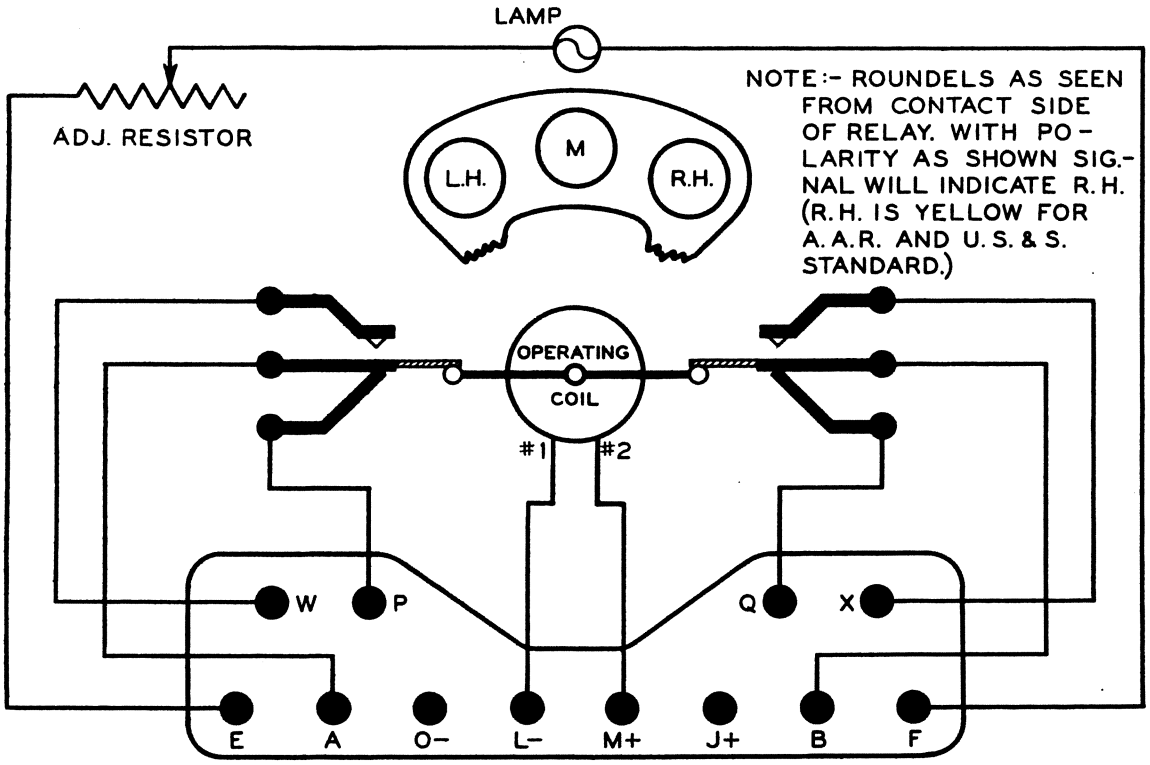

Figure 13. Diagram of Internal Wiring of Signal. (Similar to Figure 12 except for terminal designation and connection of coil leads.)

XII. REFLECTOR ASSEMBLY

The reflector and lamp socket assembly should be removed from its retaining ring and examined to see that the glass reflector and its reflective backing are in good condition. The retaining ring should be examined and the glass window cleaned. If there are any cracks or heavy scratches in this window it should be replaced. Install the retaining ring in the top case, placing a thin film of thickened insulating varnish between it and the top case. Make sure that the sealing screw with the hole through the head is placed on the left side. On units equipped with (or to be equipped with) plug couplers, the plug coupler latch is attached under the head of the lower retaining ring screw. Insert the reflector and socket assembly in the retaining ring and attach the lamp leads to their binding posts on the front of the terminal board. Each reflector assembly is labeled on the back with the designation "H" or "H-2" depending upon the type of signal for which it was adjusted. When installing, check to see that this designation corresponds to the type of unit to which it is being assembled. Should the reflector or socket be broken or damaged it should be replaced. If facilities are available socket readjustments should be made as outlined in Section XIX. If facilities are not available, the reflector assembly should be returned to the factory for repair and adjustment.

XIII. CONTACT ADJUSTMENT

Contacts may now be set and adjusted. All contacts as shown in Figures 7 and 8 should have at least 0.050 inch opening. With the front contacts fully compressed, and counterweight arm against the front stop, the silver to silver impregnated graphite front contacts should have a slide of 1/32 inch. With the counterweight against the back stop and the back contacts fully compressed the silver to silver back contacts should have a slide of 1/64 inch. With the back contacts just open there should not be more than 1/8 inch of the outer roundel showing in the opening in the case for the light beam. The contact fingers should be in line, and with contacts fully compressed the contacts should bear squarely on the contacting surface.

Silver members should be carefully cleaned, in accordance with contact cleaning Specification SU-4560, before contacts are adjusted. Best service is obtained from a contact surface which is highly polished. Care should be exercised in selecting a polishing agent to secure one which does not scratch the surface of the silver, or leave a residue which will set up corrosion. The polishing operation should be done by stroking in the direction of slide.

The silver impregnated carbon tips should be cleaned by filing lightly in the plane parallel to the spring. An extremely fine file should be selected for this cleaning. After filing, it is advisable to remove the loose graphite particles by pulling a strip of clean bond paper through the contact space against the tip. To avoid introducing particles of paper, the strip should be wider than tip and the ends or sides of paper should not be passed between contact members.

Cleaned contact resistance, taken after adjustment and after calibration of the unit, should be less than the following:

Silver to silver	0.030 ohm
Silver to graphite	0.750 ohm
Silver to silver impregnated graphite	0.100 ohm

XIV. PERMANENT MAGNET ASSEMBLY

As previously stated, the individual permanent magnets have been stamped with a letter S at the end which attracts the North seeking pole of a compass. When the original style tungsten magnets shown in Figure 2 are to be reassembled to the mechanism, the ends marked with the letter S should be down. The magnets should be securely clamped in place with the clamping clips and screws. After the nut on the clamping screw is tightened, its lock washer should be turned up. After magnets are in place, attach the two retaining clips to the spacer blocks and lock them with lock washers. The magnets should be the last part assembled to the unit before calibration and, until calibration has been done, the mechanism should have a clean glass cover placed on it. This is done to prevent the possible introduction of dirt or small particles of iron into the relay by the magnets before it can be sealed.

A. When the new Alnico magnets described in Section VIII are to replace the old tungsten magnets, the assembly should be made as follows: (Refer to Figure 11.)

1. Separate the new Alnico magnet from each pair and assemble magnet O, clip N, screw P, and nut M, as shown, with the nut started on the screw by only two or three threads.

2. Assemble to each side of the operating unit one magnet assembly as described above. Make certain that the marked end of the Alnico magnet is positioned up and the magnet is assembled on the side of the slotted spacer, away from the field pole pieces and armature pole shoe as illustrated in Figure 11. Tighten the magnet assembly until the clip is 1/32 inch from the surface of the magnet. CAUTION: Breakage of the magnet may result if the clip is tightened against the surface of the Alnico magnet.

The condition of the charge on the permanent magnets is important as it affects the calibration of the unit. The charge can be checked during calibration as described in Section XV. If the operating values as specified in Table III cannot be met by adjustment of counterweight L (Figures 7 and 8), the charge in the permanent magnets is incorrect. A high pick-up together with a high drop-away and minimum counterweight adjustment is an indication of low charge on the magnets. In this case the magnets should be replaced with new ones which have been charged and checked at the factory. The magnets which were removed may be returned to the factory for checking and recharging. For satisfactory results the methods and necessary equipment for checking and charging magnets in the laboratory are not economically adaptable to field

use. However, in repair shops where test equipment is available for measurement of the charge in a magnet, it is suggested that a pair of magnets of the type under test be obtained from the factory. These magnets should be laboratory calibrated before leaving the factory and thus can be used as a comparison standard for testing magnets in field repair shops.

XV. CALIBRATION

The operating unit should be calibrated to meet the requirements of pick-up and drop-away shown in Table III. The operating values are varied by adjustment of the counterweights L (Figures 7 and 8).

A. Drop-Away

Apply voltage equal to twice the pick-up value shown in the table, and then gradually reduce the voltage until both counterweight arms F (Figures 7 and 8) just touch the rollers I. This value of voltage is the drop-away, and should be not less than the value indicated in Table III.

A smooth travel of the armature from the pick-up to the drop-away position, together with a satisfactory drop-away value, indicates that the moving parts are free from friction.

There may be some slight additional movement of the roundel spectacle when the voltage is further reduced. This is due to a tendency of the armature to lift off the knife-edge slightly when picking up, and then to settle back again when the voltage is reduced, which may not occur until below the drop-away point defined above. The clearance in the knife-edge bearing is such that this lift is controlled within very narrow limits and has no detrimental effect on the operation of the mechanism, or the proper position of the roundels.

If the armature has not settled back preliminary to the drop-away point, there will be noted a slight opening between the counterweight arm and its back stop. Further reduction in voltage should result in the counterweight arm coming against the stop at or before zero voltage.

B. Pick-Up

Immediately after measuring the drop-away, the circuit should be opened for one second. Apply voltage in the same direction. Gradually increase the voltage until the counterweight arm just touches the upper stop. This voltage is the pick-up value and should not exceed the value for pick-up given in Table III.

The polarity of the voltage on the operating coil should be reversed. Apply a voltage twice the pick-up value indicated in Table III to the unit. Measure the drop-away and pick-up values as outlined in the preceding paragraphs. NOTE: An adjustable resistance connected as a potentiometer is considered the best method of varying the voltage.

C. Reverse Pick-Up

1. Apply a voltage equal to twice the pick-up value indicated in Table III, to the armature. Reduce this voltage until the armature comes to the central or drop-away position. Open the circuit. Apply voltage in the reverse direction. Gradually increase the voltage until the counterweight arm just touches the upper stop. This voltage value is the reverse pick-up and shall not exceed 5.4 volts for 250 ohm units and 7.9 volts for 500 ohm units.

2. Continue increasing the voltage to twice the amount required for pick-up and then reduce the voltage until the armature comes to the drop-away position. Open the circuit, reverse the polarity, and gradually increase the voltage until the counter-weight arm touches the upper stop. The value of reverse pick-up for this side must not exceed the values given above for Reverse Pick-Up, and in addition, must not vary more than 0.3 volt from the reverse pick-up already taken for the other side.

TABLE III. OPERATING VALUES (Shop Test)

Type of Unit	Ohms Res. Armature	Armature Drop-Away	Volts Pick-Up	Armature Volts On Name Plate
With Contacts	250	2.0	5.2	5.5
Without Contacts	250	2.6	5.2	5.5
With Contacts	500	3.0	7.6	8.0
Without Contacts	500	3.8	7.6	8.0

The calibration values indicated are the shop values used when the operating units were manufactured. Units that are overhauled should be adjusted to meet these calibration values.

XVI. INSPECTION BEFORE SEALING

A. Before sealing the operating units make certain that:

1. Screws holding counterweights are tight and properly locked.

2. Screws B (Figure 1) are tight and are either locked or pricked punched as specified under assembly.

3. Screws holding contact springs are tight and properly locked.

4. Screws holding contact spring boards to unit are tight and properly locked.

5. Screws holding bearing caps are tight.
6. Pivot screws for counterweight arms are tight in the bracket.
7. All split pins are properly spread and they do not bind in center member of pivoted joint.
8. Counterweight arms operate freely, have proper clearance from adjacent parts, and properly engage the stops with sideways motion taken up.
9. Top of spectacle can be moved only a slight amount without lifting the counterweight.
10. Unit is free from all dirt and foreign material.
11. Wiring and polarity checks with wiring diagram (Figure 12 or 13).
12. Glass case and all glass roundels, covers, and lenses are cleaned and polished.
13. Name plate has piece number, serial number, resistance, and armature volts stamped on it. The armature volts marked on name plate should correspond to those in Table III.

XVII. SEALING

The glass cover should be fastened securely in place, care being taken to locate it so that it will bear evenly on the gasket and will clear all operating parts.

WARNING

On H or H-2 Searchlight Signals furnished with glass cases (prior to 1955), a possible operational hazard may be created by improper reseating of the sealing gasket. When the unit is disassembled for maintenance, the gasket may separate from the glass. If, during reasassembly, the loose gasket is pushed down inside the case it may interfere with the proper operation of the mechanism. The possible effect of this hazard is to stick the mechanism in a proceed mode, even though energy is removed from the relay. It is strongly recommended that glass case H and H-2 signals be converted to later design plastic case models during reassembly to eliminate the possibility of this problem.

The plastic case incorporates a permanently imbedded gasket which has no potential to cause the above problem. Ordering references for the plastic case are given in items 7 and 8 on page 34.

On units having strap support for glass cover this strap should be flat against the bottom, with cork strips in place between it and the curved. portion of the glass. The strap should be drawn up evenly on each side by its tightening screws. The two sealing plates for the support strap may then be slid into place and the unit sealed as follows:

Lead seals are applied to both support strap sides, both sides of lens or front cover glass housing, and between the reflector retaining rings and its left hand screw. Wax seals are applied to the two holes in

the terminal board to cover the heads of screws fastening it to top case.

On original type units the cover is held on with two screws through the bottom of the cover instead of the strap method. These screws should be tightened just enough to hold the cover firmly in place. After tightening, screws should be locked with nut locks. Wax seals are then placed in the sealing wells around the screws. Other seals are placed as described above.

XVIII. FINAL INSPECTION

After sealing the unit, a visual inspection should be made to see that its parts have not been damaged in applying the glass cover and that the glass cover has proper clearance from all operating parts.

See that the reflector is tight in the reflector holder. Check holding springs to see they have sufficient tension to properly seat the reflector holder.

XIX. ADJUSTMENT OF LAMP SOCKET

If the adjustment of the lamp socket has been disturbed, readjustment will be necessary. To do this, the operating unit is placed in a standard high signal case mounted on a support approximately 50 feet from a vertical white screen in a dark room. The screws supporting the unit in the signal case should be tight, and the pads on the unit tight against the corresponding pads on the signal case. The screen should have two crosses, one 7-3/8 inch above the other on the same vertical line (refer to Figure 14). Adjust the position of the signal case so the sighting device M of the signal is aligned on the upper cross N. Tighten the adjusting nuts to hold the case in place. Place a standard lamp O in the socket and apply, approximately, its rated voltage. The lamp used as a "standard" should be obtained from the factory to insure careful selection for proper filament shape, size, and axial alignment.

Adjust the nuts P on the screws supporting the lamp socket until the light beam from the signal strikes the screen and is centered on the lower cross Q. This aligns the light beam parallel to the sighting device M on the signal case. All three nuts P on the studs supporting the lamp socket should be adjusted until a light beam of maximum intensity is obtained, that is, until the image on the screen is of smallest possible size, keeping the image centered on the lower cross. Tighten the jam nuts and apply solder between all adjusting nuts, lamp socket supporting plate and jam nuts to seal the adjustment.

XX. INSTALLATION OF SHIPPING SCREWS

On recently manufactured units equipped with the plastic cover, provision has been made for the application of shipping screws through holes in the cover to prevent damage to the unit during shipment (see Figure 15). The soft rubber washer A is applied next to the head of the shipping screws B. Insert screws B through holes C of the plastic cover D and screw the threaded ends into the hold-down brackets E of the counterweight arm and contact anvil F. Tighten the shipping screws to prevent movement of the counterweight arm assembly. CAUTION: Excessive tightening may result in damage to the plastic cover.

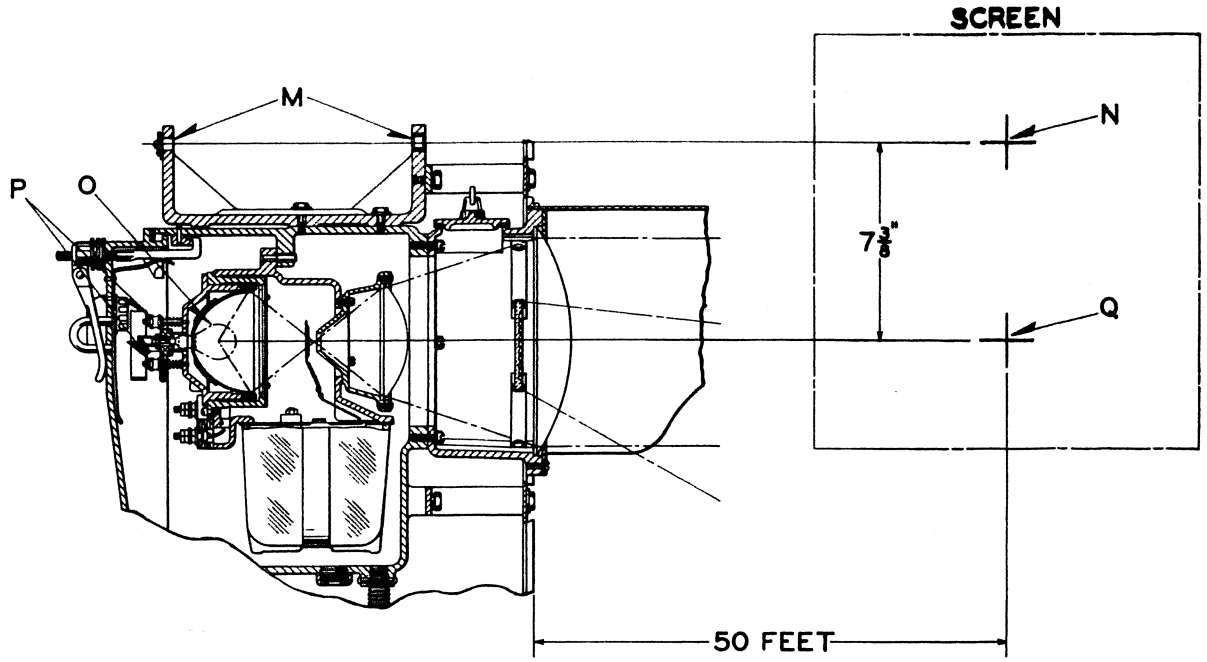

Figure 14. Layout for Readjusting the Lamp Socket

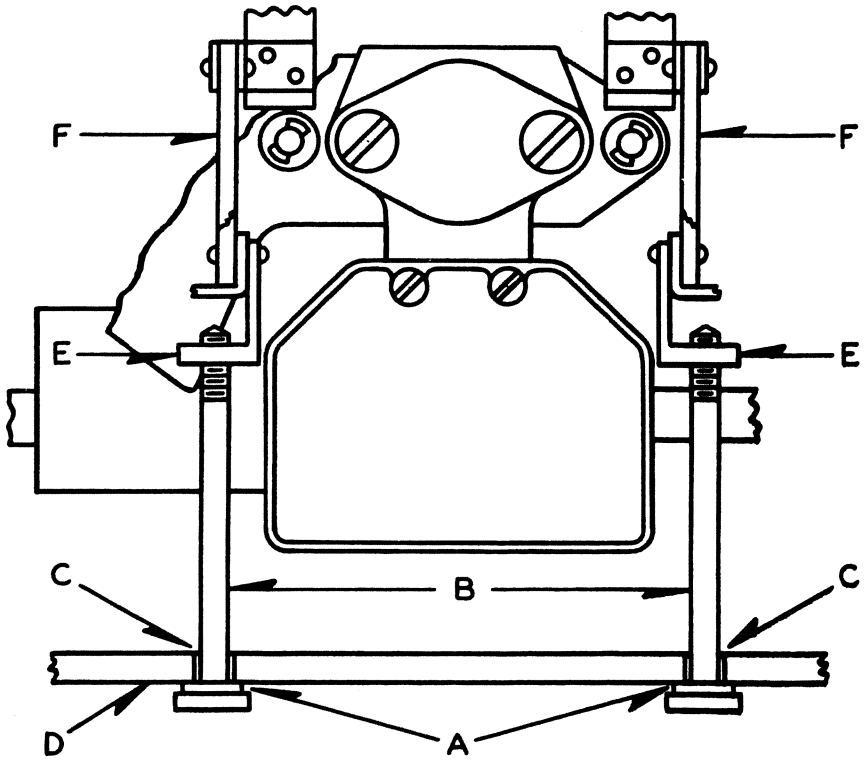

Figure 15. View Showing Application of Shipping Screws

In addition to adding shipping screw assemblies to the standard production units, provision has also been made to add them to all existing units. The brackets E, illustrated in Figure 15, make this possible. The additional material required to achieve this modification is covered by shipping bill of material reference UO374034-C9158 Sheet 13. The following paragraphs outline the necessary steps to achieve modification of the several types of units which are in use.

A. Application to units equipped with strap mounted lower cases:

1. Discard old lower case.

2. Attach new plastic lower case UM333006, using same strap, screws, etc., but making sure that the tapped holes in the bottom are on the contact side and line up with the tapped holes in brackets.

3. With unit in upright position, insert shipping screws UM345204, to which rubber washers UM330411 have been applied under the head, through the two tapped holes in the plastic case.

4. Thread the shipping screws into the bottom of brackets. Tighten the screws until the ends of the counterweight arms are snug against the lower stop nuts and will not move. Do not exert enough force to distort the contacts.

5. Attach to the mechanism the instruction tag UN345237, which has two plugs for the case holes affixed to it.

6. When installing unit in service, handle shipping screws as directed on the tag.

B. Application to units equipped with glass lower cases which are fastened with two screws through the case:

1. Top case, etc., must be modified to take care of strap mounting of lower case.

2. Obtain material covered by reference UO322116-C9158 Sh. 16, which contains everything necessary plus drawings and instructions for modification.

WABCO

C. Ordering References

1. 0374034-C9158 Sh. 13 - Material required for converting to long molded busings in contact and counterweight arms. Orders for this conversion kit must state whether material is to be used on Style H or on Style H-2 searchlight signal operating units, so that the proper name plate can be furnished with the order.

2. X436937 - Same as 0374034 except having complete contact spring board assembly.

3. 0374035-C9158 Sh. 13 - Material required with 0374034 when adding shipping screws.

4. 0322116-C9158 Sh. 16 - Material required to apply strap mounted lower cases to units equipped with glass cases attached with two screws through case. (On orders, state that this is to be furnished less case N347111 since a case is already furnished with 0374035.)

5. X395595-001 - Material required for converting any H operating unit to long molded delrin bushings and the improved pivotless contact arrangement.

6. X395595-002 - Material required for converting any H2 operating unit to long molded delrin bushings and the improved pivotless contact arrangement.

7. X322116-C9158 Sh. 16. H or H2 signals with glass case and stud mounting. This is a complete kit to convert units to plastic, strap mounted cases.

8. N347111-8163 Sh. 400. Plastic case only to convert H or H2 signals with strap mounted glass cases to plastic cases.

WABCO

ADDENDUM 1
SERVICE MANUAL 2377

STYLE "H" AND "H-2" D.C. SEARCHLIGHT SIGNAL OPERATING UNIT
WITH ALNICO PERMANENT MAGNETS

This addendum provides information to update printed copies of Service Manual 2377 printed September, 1974.

Make the following changes to all copies in order to provide better clarification and technical accuracy.

PAGE 14, PARAGRAPH 1, LINE 4

From . . . .locks (described earlier in this specification).

To . . . .Locks (described in Section IX "Armature Stops").

PAGE 14, PARAGRAPH 1, LINES 11, 12 and 13

From . . . .order kit X395595-001 for the H mechanics or kit X395595-002 for the H2 mechanics. Note also that a special pivot screw is required for short

To . . . .order kit X395595-001 for the H mechanisms or kit X395595-002 for the H2 mechanism. Note also that a special pivot screw was required for short

PAGE 16, PARAGRAPH 2, LINE 8

From . . . .These should be .098 inch in diameter (#40 drill size) and should be

To . . . .These should be .1015 inch in diameter (#38 drill size and should be

October, 1975
A-75-500-407-AD-1

PRINTED IN U.S.A.

WESTINGHOUSE AIR BRAKE COMPANY
UNION SWITCH & SIGNAL DIVISION
Swissvale Post Office, Pittsburgh, Pa. 15218
An American-Standard Company